NOZZLE SCHEDULE & ACCESSORY LIST					
TAG	QTY	SIZE	DESCRIPTION	DEG	ELEV
A	1	16	THREADED TOP ACCESS	0	DM

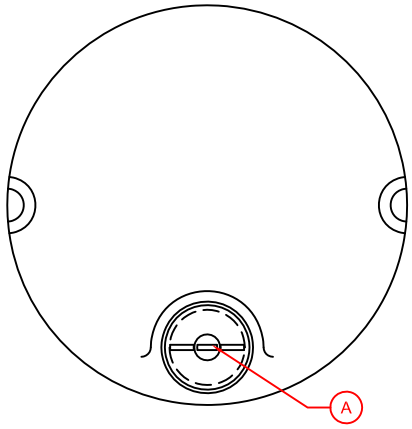

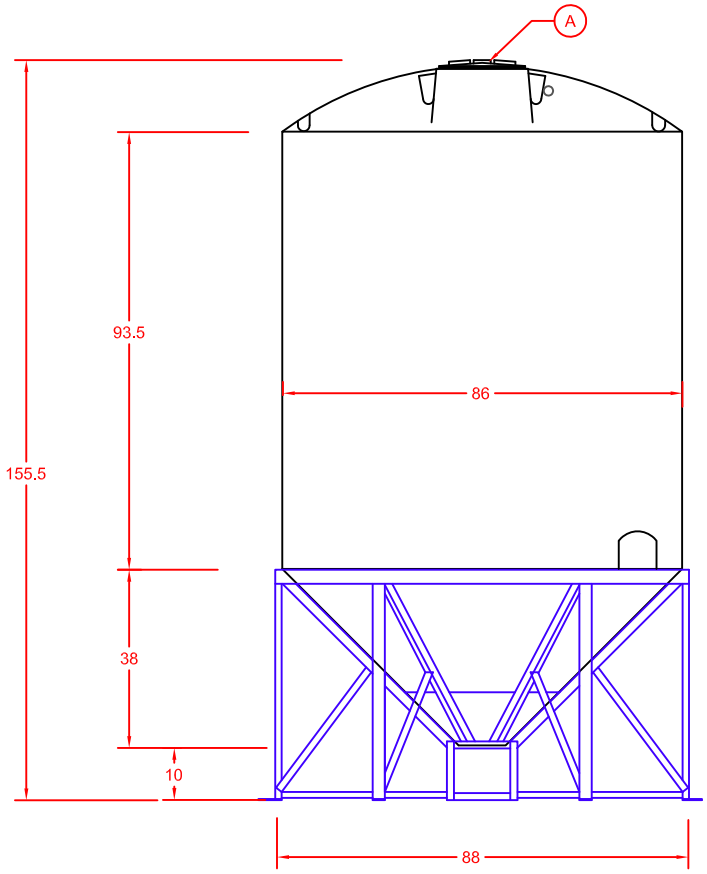

GENERAL NOTES:

1. MATERIAL: TANK TO BE ONE PIECE MOLDED OF HIGH DENSITY POLYETHYLENE, COLOR: NATURAL, DESIGNED FOR CONTENTS TO S.G.
2. CONTENTS:
3. OPERATING TEMP:
4. FLANGES TO BE HAND WELDED W/ NITROGEN GAS
5. ORIENT ALL FITTINGS FROM PLAN VIEW
6. TANK REQUIRES 100% BOTTOM SUPPORT
7. ALL PIPING & VALVES MUST HAVE IT'S OWN SUPPORT AND ALLOW FOR TANK EXPANSION & CONTRACTION OF 1.5% DIMENSIONAL MOVEMENT. FLEX CONNECTIONS SHOULD BE DESIGNED FOR A .5° ANGULAR MOVEMENT.
8. TANK IS TO BE LOCATED
9. TANK IS DESIGNED FOR ATMOSPHERIC PRESSURE ONLY
10. ALL WFN/WPFN FLANGES ARE 150# BOLT SPACED PER ANSI B16.5, THEY ARE FULL RAISED FACE DESIGN AND REQUIRE FULL FACED GASKETS.
11. ALL WFN/WPFN NOZZLES REQUIRE 11 FT-LBS OF TORQUE TO SEAL. DO NOT OVER TIGHTEN FLANGES.
12. CHECK BOLT LENGTH WHEN PIPING TO A WPFN FLANGE BEFORE INSTALLATION. WPFN REQUIRE SHORTER BOLT LENGTHS.
13. CHECK ALL CHEMICAL AND TEMPERATURE COMPATIBILITY WITH CONSTRUCTION MATERIAL PRIOR TO TANK USE.
14. ALL DIM. ARE IN INCHES/DEGREES UNLESS OTHERWISE NOTED.

QUAN. REQ.: ( )

THIS DRAWING, THE NAME"PROTECTOPLAS", AND ALL LOGOS ARE PROPERTY OF EBCO INC. THEY MAYNOT BE ALTERED, COPIED, OR USED IN ANY WAY WITHOUT WRITTEN PERMISSION FROM EBCO INC.

REV. NO.	REV. BY	REV. NOTE
CUSTOMER		
TITLE	2600 CONE BOTTOM TANK 45°	

PROTECTOPLAS COMPANY
DIVISION OF EBCO, INC.
STREETSBORO, OHIO 44241 USA

SCALE: NTS	BY: ZE	DATE: 3/23/2011	DRW NO.